GenTarget Inc

7930 Arjons Drive, Suite B
San Diego, CA 92126, USA
Phone: 1 (858) 265-6446
Fax: 1 (800) 380-4198
Email: orders@gentarget.com

Pre-made Negative Control Lentivirus

Cat#	Product Name	Amounts
CMV-Null-Bsd	CMV Control lentiviral particles (Bsd)	200ul/each, (1 x 10^7 IFU/mL in DMEM medium)
CMV-Null-Neo	CMV Control lentiviral particles (Neo)	
CMV-Null-Puro	CMV Control lentiviral particles (Puro)	
CMV-Null-GB	CMV Control lentiviral particles (GFP-Bsd)	
CMV-Null-GP	CMV Control lentiviral particles (GFP-Puro)	
CMV-Null-RP	CMV Control lentiviral particles (RFP-Puro)	
CMV-Null-RB	CMV Control lentiviral particles (RFP-Bsd)	
CMV-Null-Hygro	CMV control lentivirus (Hygro)	
CMV-Null-Zeo	CMV control lentivirus (Zeo)	
CMV-Null	CMV control lentivirus (No Selection)	
EF1a-Null-Bsd	EF1a Control lentiviral particles (Bsd)	
EF1a-Null-Neo	EF1a Control lentiviral particles (Neo)	
EF1a-Null-Puro	EF1a Control lentiviral particles (Puro)	
EF1a-Null-GB	EF1a Control lentiviral particles (GFP-Bsd)	
EF1a-Null-GP	EF1a Control lentiviral particles (GFP-Puro)	
EF1a-Null-RP	EF1a Control lentiviral particles (RFP-Puro)	
EF1a-Null-RB	EF1a Control lentiviral particles (RFP-Bsd)	
EF1a-Null-Hygro	EF1a control lentivirus (Hygro)	
EF1a-Null-Zeo	EF1a control lentivirus (Zeo)	
EF1a-Null	EF1a control lentivirus (No Selection)	
CMV-Null-Bsd-PBS	CMV Control lentiviral particles (Bsd) in PBS	
CMV-Null-Neo-PBS	CMV Control lentiviral particles (Neo) in PBS	
CMV-Null-Puro-PBS	CMV Control lentiviral particles (Puro) in PBS	
CMV-Null-GB-PBS	CMV Control lentiviral particles (GFP-Bsd) in PBS	
CMV-Null-GP-PBS	CMV Control lentiviral particles	

GenTarget Inc

7930 Arjons Drive, Suite B
San Diego, CA 92126, USA
Phone: 1 (858) 265-6446
Fax: 1 (800) 380-4198
Email: orders@gentarget.com

	(GFP-Puro) in PBS	200ul/each, (1 x 10^8 IFU/mL in PBS solution)
CMV-Null-RP-PBS	CMV Control lentiviral particles (RFP-Puro) in PBS	
CMV-Null-RB-PBS	CMV Control lentiviral particles (RFP-Bsd) in PBS	
CMV-Null-PBS	CMV Control (No Antibiotic), Concentrated Lentivirus in PBS	
EF1a-Null-Bsd-PBS	EF1a Control lentiviral particles (Bsd) in PBS	
EF1a-Null-Neo-PBS	EF1a Control lentiviral particles (Neo) in PBS	
EF1a-Null-Puro-PBS	EF1a Control lentiviral particles (Puro) in PBS	
EF1a-Null-GB-PBS	EF1a Control lentiviral particles (GFP-Bsd) in PBS	
EF1a-Null-GP-PBS	EF1a Control lentiviral particles (GFP-Puro) in PBS	
EF1a-Null-RP-PBS	EF1a Control lentiviral particles (RFP-Puro) in PBS	
EF1a-Null-RB-PBS	EF1a Control lentiviral particles (RFP-Bsd) in PBS	
EF1a-Null-PBS	EF1a Control (No Antibiotic), Concentrated Lentivirus in PBS	

Storage: <-70 °C, avoid repeat freeze/thaw cycles. Stable for >6 months.

Product Description:

GenTarget's lentivector system is Human Immunodeficiency Virus-1 (HIV) based plasmids for gene expression and knockdown. The lentivectors are used to generate lentiviral particles (lentivirus) that can be transduced into almost all kinds of mammalian cells, including stem cells, primary cells, and non-dividing cells both *in vivo* and *in vitro*. Lentiviral Particles stably integrate into the transduced cells' genome for long term expression, making it a great gene transfer agent.

GenTarget provides pre-made lentivirus expressing fluorescent proteins, enzymes, human or mouse target. The lentivirus is generated under an *Optional Inducible CMV promoter* (**TetCMV**), or an enhanced constitutive **CMV promoter**, or an enhanced **EF1a promoter**. To serves as the negative controls for lentivirus treatment, GenTarget also provides the *Negative control lentivirus*.

GenTarget Inc

7930 Arjons Drive, Suite B
San Diego, CA 92126, USA
Phone: 1 (858) 265-6446
Fax: 1 (800) 380-4198
Email: orders@gentarget.com

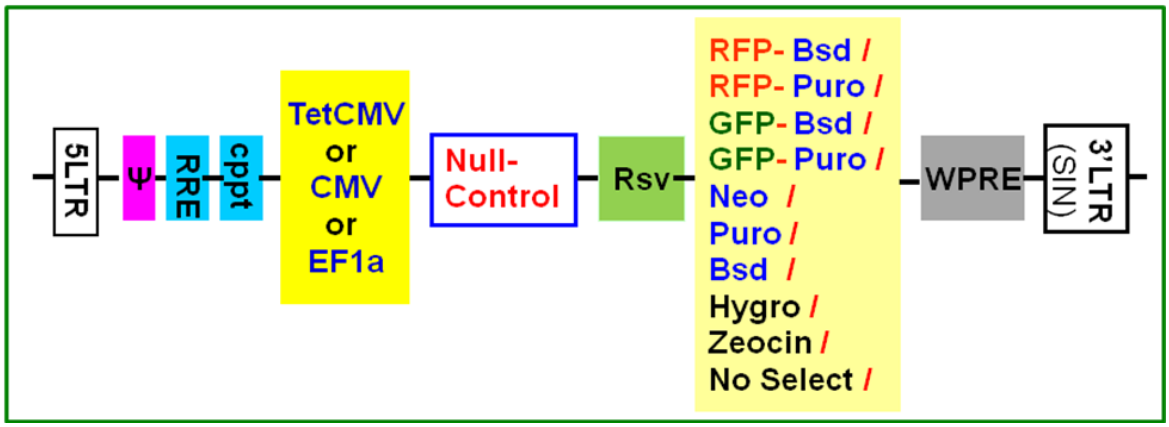

The controls are made from the same lentivector backbone as the target expression vector, cloned with a Null spacer sequence (200bp) replacing the target sequence. The control lentivirus is packaged in the same way as any target expression virus, but control lentiviruses do not express a specific target because the Null sequence does not contain a start codon. Please see the map scheme above for the control lentivector core-structure.
Control lentiviruses contain antibiotic markers matching that in our target expression lentiviruses. The control virus can be used alone to evaluate lentiviral transduction efficiency and for other applications.

VSV-G pseudotyped control lentiviruses are generated in 293T cells and provided as 200 µl per vial in either DMEM medium (containing 10% serum) or concentrated in PBS solution. For more details about premade particles, please see FAQs for pre-made lentiviral particles (.pdf).

Key features:

- High viral titer
- Different antibiotic selection
- Easy transduction monitoring by fluorescence
- Ready to use: simply add 50 µl per well in a 24-well plate.

Transduction Protocols:

1. Transduction Protocol for Adhesive cells:

Note: Pre-made lentivirus is provided ready to use, so it can be simply added into your cell culture; the amount of virus to add depends on cell type. For quick transduction, add 50 µl of virus into each well of 24-well-plate where cell density is 50% to 75%. After 72 hours (no need to change medium), visualize positive transduction rate by fluorescence microscopy. For stable cell line generation, pass

7930 Arjons Drive, Suite B
San Diego, CA 92126, USA
Phone: 1 (858) 265-6446
Fax: 1 (800) 380-4198
Email: orders@gentarget.com

cells into medium containing antibiotic or perform fluorescence cell sorting followed by antibiotic selection.

Day 0:

Seed cells in complete medium at the appropriate density and incubate overnight.

Note: at the time of transduction, cells should be 50%-75% confluent. For example, seed HeLa cells at 0.5 x 10^5/ml x 0.5ml in a well of a 24-well plate.

Day 1:

- Thaw the pre-made lentiviral stock at room temperature and add the appropriate amount of virus stock to obtain the desired MOI.
- Return cells to 37°C, CO_2 incubator. Do nothing.

  Note: Try to avoid freezing and thawing. If you do not use all of the virus at one time, you may re-freeze the virus at -80 °C for future use; virus titer will decrease by ~10% for each freeze/thaw cycle.

Day 3:

At 48hr~72hr (Depend upon cell type) after transduction, check the transduction rate by fluorescence microscopy or calculate the exact transduction rate by flow cytometry (FACS or Guava).

Day 3 + (optional):

Sort transduced cells by FACS, or select by antibiotic killing. A pilot experiment should be done to determine the antibiotic's kill curve for your specific cell line (refer to the pertinent literature on generation of stable cell lines).

2. Transduction Protocol for Suspension Cells:

Grow cells in complete suspension culture medium; use a shaking flask in a CO^2 incubator if required.

Measure cell density (not grow over 3 million/ml), measured viability should be > 90%. Dilute cells into 1 x 10^6 cell/ml in complete medium.

Day 1:

- Thaw lentiviral particles at room temperature.
- Add premade lentiviral particles into the diluted cells at a ratio of: 50 to 100 µl virus per 0.5 ml of cells (Note: depending on cell type, you may need to use more or less virus).
- Grow cells in a shaking flask in a CO2 incubator.

7930 Arjons Drive, Suite B
San Diego, CA 92126, USA
Phone: 1 (858) 265-6446
Fax: 1 (800) 380-4198
Email: orders@gentarget.com

Day 2:

At 24 hours after transduction, add an equal amount of fresh medium containing. Continue growing cells in CO2 incubator.

Day 3+:

At 48 hour to 72 hours (Depend upon cell type) after transduction, check fluorescence with a fluorescence microscope or calculate the transduction efficiency using a cell sorter such as FACS or Guava. Pass cells into 0.5 million/ml density in completed medium containing the corresponding antibiotic (**Note:** amount of antibiotic depends on cell type. A killing curve must pre-established). Sort for fluorescence positive cells and maintain antibiotic selection to generate a stable cell line.

Note: Filter wavelength settings:

GFP filter: ~Ex450-490 ~Em525;
RFP filter: ~Ex558 ~Em583;

Safety Precaution:

Gentarget lentiviral particles adapts must advanced lentiviral safety features (using the third generation vectors with self-inactivation SIN-3UTR), and the premade lentivirus is replication incompetent. However, please use extra caution when using lentiviral particles. Use the lentiviral particles in Bio-safety II cabinet. Ware glove all the time at handling Lentiviral particles! Please refer CDC and NIH's guidelines for more details regarding to safety issues.

Warranty:

This product is for research use only. It is warranted to meet its quality as described when used in accordance with its instructions. GenTarget disclaims any implied warranty of this product for particular application. In no event shall GenTarget be liable for any incidental or consequential damages in connection with the products. GenTarget's sole remedy for breach of this warranty should be, at GenTarget's option, to replace the products.

References:

1. BioTechniques 38:891-894(June 2005);
2. THE JOURNAL OF BIOLOGICAL CHEMISTRY Vol. 279, No. 5, Issue of January 30, pp. 3212–3217, 2004;
3. Biosci. Biotechnol. Biochem., 68(3), 565-5570, 2004;
4. Annu Rev Microbiol. 1994;48:345-69.
5. Microbiol Mol Biol Rev. 2005 Jun;69(2):326-56.
6. APPLIED AND ENVIRONMENTAL MICROBIOLOGY, July 2005, p. 3427–3432;
7. Molecular & Biochemical Parasitology 155 (2007) 167–171;
8. NIH Guidelines for Biosafety Considerations for Research with Lentiviral Vectors. (Link).
9. CDC guidelines for Lab Biosafety levels (Link).

GenTarget Inc

7930 Arjons Drive, Suite B
San Diego, CA 92126, USA
Phone: 1 (858) 265-6446
Fax: 1 (800) 380-4198
Email: orders@gentarget.com

Attachment: GenTarget's pre-made lentivirus product categories.

Product Category	Product Description (please click into each category's page)
Pathway Reporter	Repoter Lentivirus for all kinds of pathway screening assays
Cell Immortalization	Lentivirus for cell immortalization: Large T-antigen, hTERT, EBNA1/EBNA2, HpV16-E6/E7, Adenovial E1A, Kras_G12V, HOXA9, et al.
ImmunoOncology Research	Lentivirus products for immuno therapy research: CAR and TCR; Assay Cell Lines for T-cell targeted killing assay and other cell-based assays; over-expression lentivirus products for the immune response targets; Cell surface antigens (CDs); immune checkpoint / Receptors; CRISPR gene Repair and knock-IN lentivirus; CRISPR knockout lentivirus;
CAR-T, TCR Lentivirus	**CARs** Lentivirus: Anti-CD19 /CD20 /CD22 /BCMA /hHER2 /HLA-A2 /TGFβ; **TCRs**: MART-1/ NY-ESO1/ CD1d-α-GalCer/ TRαV3-F2A-TRβV5-6;
CRISPR Gene Editing	Preamde lentivirus express humanzied wild-type **Cas9** endonuclease, the **dCas9**, gRNAs, **CRISPR** gene editing research
Epigenomic: CRISPRi and CRISPRa	"**dCas9-Protein**" fusion Lentivirus for epigenomic modification, resulted in CRISPR interference (CRISPRi) or activation (CRISPRa).
Cell-Specific Reporter	a set of reporter lentiviruses to express a luminescence or fluorescent reporter (firefly Luciferase, Renilla luciferase, RFP or GFP fluorescent marker) under a tissue specific promoter
Infectious Antigens	Llentivirus that express all kinds of infectious antigens with C-term 6His-tag.
Virus Like Particles (VLP)	Lentiviral Like Particles, pseudo-typed with a different envelope proteins.
Non-integrating LV	Integration Defective Lentivirus, express different targets for transient expression without the unwanted insertional mutagenesis.
shRNA Knockdown	Knockdown verifeid and customized shRNA lentivirus for target knockdown,

GenTarget Inc

7930 Arjons Drive, Suite B
San Diego, CA 92126, USA
Phone: 1 (858) 265-6446
Fax: 1 (800) 380-4198
Email: orders@gentarget.com

Product Category	Product Description (please click into each category's page)
microRNA lentivirus	Premade lentivirus expression human or mouse **precursor miRNA**. And **anti-miRNA** lentivector and virus for human and mouse miRNA.
Anti-miNA lentivirus	Pre-made lentivirus expression a specific anti-miRNA cassette.
Human and mouse ORFs	Premade lentivirus expressin a **human, mouse or rat** gene with RFP-Blastididin fusion dual markers.
Luciferase expression	Premade lentivirus for all kinds of luciferase protein expression**: firefly and Renilla, Red-Luc and more,** with different antibiotic selection markers.
Fluorescent Markers	Lentivirus express all commonly used fluorescent proteins: GFP, RFP, CFP, BFP YFP, niRFP, unstable GFP and others.
Luminescent Imaging	Lentivirus express Nano-Latern as Bio-probes for in vivo imaging of sub-cellular structural organization and dynamic processes in living cells and organisms
Sub-cellular Imaging	Lentivirus contain a well-defined organelle targeting signal fusioned to a fluorescent protein, great tools for live-cell imaging and for dynamic investigation of sub-cellular signal pathways.
Cytoskeleton Imaging	A fluorescent marker (GFP, RFP or CFP) fusion with a cellular structure protein, provides a convenient tool for visualization of cytoskeletal structure
Unstable GFP	Lentivirus express the the destabilized GFP (uGFP) which provides fast turnover responses in signal pathway assay and in knockdown / knockout detection
near-infrared RFP	The near-infrared Red fluorescent (niRFP) expression Lentiviurs provides the whole-body images with better contrast and brighter images
Fluorescent-ORF fusion	Pre-made lentivirus expression a "**GFP/RFP/CFP-ORF**" fusion target.
CRE recombinase	Premade lentivirus for expressing **nuclear permeant CRE** recombinase with different flurescent and antibiotic markers.
CRE, Flp ColorSwtich	Lentivirus expressing "LoxP-GFP-Stop-LoxP-RFP" or "FRT-GFP-Stop-FRT-RFP" cassette, used to monitor the CRE or Flp recombination event in vivo.

7930 Arjons Drive, Suite B
San Diego, CA 92126, USA
Phone: 1 (858) 265-6446
Fax: 1 (800) 380-4198
Email: orders@gentarget.com

Product Category	Product Description (please click into each category's page)
SEAP Reporter	lentivirus expressing SEAP under different promoters (TetCMV, EF1a, CAG, Ubc, mPGK, Actin-beta or a signal pathway responsive promoter),
TetR Repressor	Premade lentivirus expressin TetR (tetracycline regulator) protein, the repressor protein for the inducible expression system.
rtTA Expression	rtTA binds to the tetracycline operator element (TetO) in the presence of doxycycline (Dox). Used for Tet-On /OFF inducible system.
iPS factors	Premde lentivirus for human and mouse iPS **(Myc, NANOG, OCT4, SOX2, FLF4**) factors with different fluorescent and antibitoic markers
LacZ expression	Express different full length **β- galactosidase (lacZ)** with different selection markers
Negative control lentiviruses	Premade **negative control lentivirus with different markers**: serves as the negative control of lentivurs treatment, for validation of the specificity of any lentivirus target expression effects.
Other Enzyme expression	Ready-to-use lentivirus, expressing a specific enzymes with different selection markers.
Ultra titer lentivirus	Ultra-titer lentivirus used for the hard-to-transduced cells and for in vivo manipulation of sperm cells, or stem cells.