GenTarget Inc

7930 Arjons Drive, Suite B
San Diego, CA 92126, USA
Phone: 1 (858) 265-6446
Fax: 1 (800) 380-4198
Email: orders@gentarget.com

Pre-made tetracycline regulator (TetR) expression lentiviral particles

CAT#	Product Name	Amounts
LVP017-GB	CMV-TetR (GFP-Bsd) Lentiviral particles	200ul, (1 x 10^7 IFU/mL) in DMEM medium containing 10% FBS and 10x polybrene (60ug/ml)
LVP017-RB	CMV-TetR (RFP- Bsd) Lentiviral particles	
LVP017-RP	CMV-TetR (RFP- P) Lentiviral particles	
LVP017-Bsd	CMV-TetR (Bsd) Lentiviral particles	
LVP017-Neo	CMV-TetR (Neo) Lentiviral particles	
LVP017-Puro	CMV-TetR (Puro) Lentiviral particles	
LVP017-Hygro	CMV-TetR (Hygro) Lentiviral particles	
LVP459-GB	EF1a-TetR (GFP-Bsd) Lentiviral particles	
LVP459-RB	EF1a-TetR (RFP-Bsd) Lentiviral particles	
LVP459-RP	EF1a-TetR (RFP-Puro) Lentiviral particles	
LVP459-Bsd	EF1a-TetR (Bsd) Lentiviral particles	
LVP459-Neo	EF1a-TetR (Neo) Lentiviral particles	
LVP459-Puro	EF1a-TetR (Puro) Lentiviral particles	
LVP459-Hygro	EF1a-TetR (Hygromycin) Lentiviral particles	
LVP017-GB-PBS	CMV-TetR (GFP-Bsd) Lentiviral particles in PBS	200ul, (1 x 10^8 IFU/mL) in PBS
LVP017-RB-PBS	CMV-TetR (RFP- Bsd) Lentiviral particles in PBS	
LVP017-RP-PBS	CMV-TetR (RFP- Puro) Lentiviral particles in PBS	
LVP017-Bsd-PBS	CMV-TetR (Bsd) Lentiviral particles in PBS	
LVP017-Neo-PBS	CMV-TetR (Neo) Lentiviral particles in PBS	
LVP017-Puro-PBS	CMV-TetR (Puro) Lentiviral particles in PBS	

GenTarget Inc

7930 Arjons Drive, Suite B
San Diego, CA 92126, USA
Phone: 1 (858) 265-6446
Fax: 1 (800) 380-4198
Email: orders@gentarget.com

LVP017-Hygro-PBS	**CMV-TetR (Hygro)** **Lentiviral particles in PBS**	
LVP459-GB-PBS	**EF1a-TetR (GFP-Bsd)** **Lentiviral particles in PBS**	
LVP459-RB-PBS	**EF1a-TetR (RFP- Bsd)** **Lentiviral particles in PBS**	
LVP459-RP-PBS	**EF1a-TetR (RFP-Puro)** **Lentiviral particles in PBS**	
LVP459-Bsd-PBS	**EF1a-TetR (Bsd)** **Lentiviral particles in PBS**	
LVP459-Neo-PBS	**EF1a-TetR (Neo)** **Lentiviral particles in PBS**	
LVP459-Puro-PBS	**EF1a-TetR (Puro)** **Lentiviral particles in PBS**	
LVP459-Hygro-PBS	**EF1a-TetR (Hygromycin)** **Lentiviral particles in PBS**	

Storage: <-70 °C, avoid repeat freeze/thaw cycles. Stable for >6 months at <-70°C.

Product Description:

Lentiviral particles or lentivirus is a gene delivery tool produced from lentivectors for gene expression or knockdown. GenTarget's lentivector system is Human Immunodeficiency Virus-1 (HIV) based plasmids for gene expression and knockdown. The lentivectors are used to generate lentiviral particles (lentivirus) that can be transduced into almost all kinds of mammalian cells, including stem cells, primary cells, and non-dividing cells both *in vivo* and *in vitro*. Lentiviral Particles stably integrate into the transduced cells' genome for long term expression, making it a great gene transfer agent.

Pre-made **tetracycline repressor (TetR)** lentiviral particles are generated from GenTarget's re-engineered lentivector system. Sequence fully verified **TetR gene** was constitutively expressed under either a our proprietary super CMV promoter (**suCMV**) or an **enhanced EF1a** promoter. The suCMV promoter provides highest TetR protein levels. The enhanced EF1a promoter is non-tissue specific promoter (active in almost all cell types) and does not be silenced after long term cell culture.

GenTarget Inc

7930 Arjons Drive, Suite B
San Diego, CA 92126, USA
Phone: 1 (858) 265-6446
Fax: 1 (800) 380-4198
Email: orders@gentarget.com

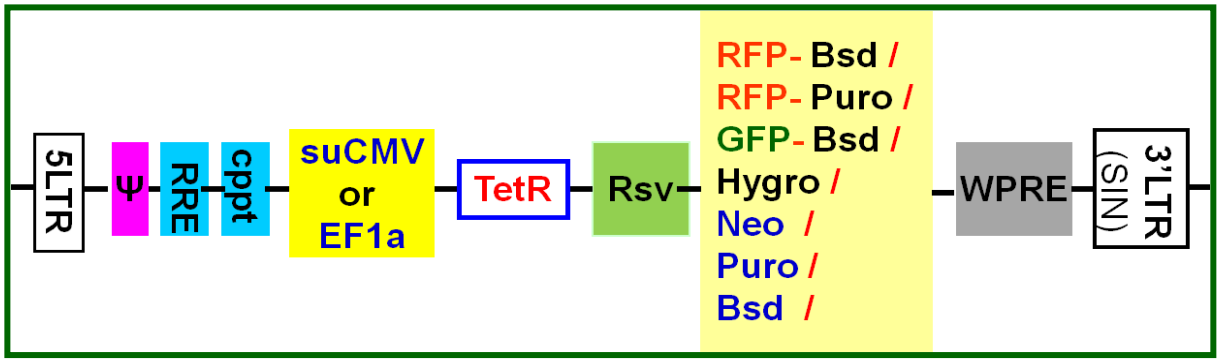

GenTarget provides the TetR expression particles with different antibiotic selection markers or fluorescent-antibiotic fusion dual markers under a separate RSV promoter. Please see the vector map schemes above for the expression lentivector core structure.

TetR is used in tetracycline inducible expression. It binds to any inducible promoters that have incorporated its binding sequence to repress target expression. And target expression is induced once tetracycline is added. The added tetracycline binds to TetR, which releases TetR from target's promoter, and starts the transcription.

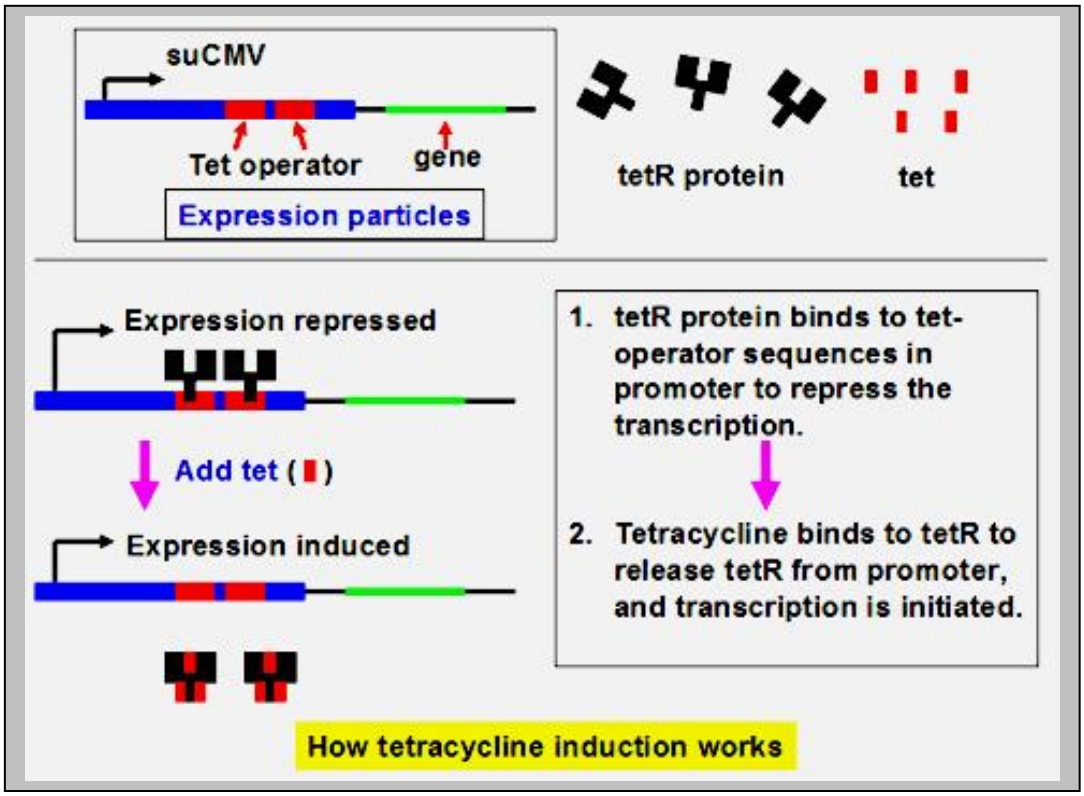

7930 Arjons Drive, Suite B
San Diego, CA 92126, USA
Phone: 1 (858) 265-6446
Fax: 1 (800) 380-4198
Email: orders@gentarget.com

VSV-G pseudotyped lentiviral particles are generated in 293T cell, and provided as 200ul/per vial in **two formats:**

1. packaged in DMEM medium with 10% of FBS with 10x polybrene; or
2. concentrated and re-suspended in PBS solution. The virus in PBS is used for trasnduce the cells that do not want serum and polybrene in the culture medium.

See FAQ for pre-made lentiviral particles (.pdf) for other questions.

Gentarget's **lentiviral inducible expression vectors** contain a strong constitutive promoter (CMV or H1) that integrated with two copies of tetracycline regulator binding sequences. This modification does not change promoter's constitutive expression status. The GOI (gene of interest) can be expressed in high level as regular promoter without any induction. However, **optionally**, Gentarget's lentiviral particles particles can be turned into tetracycline inducible system by using TetR expressing particles. To achieve this inducible expression, the TetR protein has to be present to bind (block) the expression in advance. And the expression is induced after addition of tetracycline which removes the TetR from the promoter. See the illustration figure below about the inducible mechanism.

Please see Optional inducible lentiviral system on our website under Technology for more information.

Key features:

1. High level of TetR expression (driven by a super CMV promoter or an enhanced EF1a), demonstrated minimal basal expression from inducible expression vectors or their expression particles;
2. Deliver TetR expression into divided and non-divided host mammalian cell lines via high virus titers;
3. Different antibiotic selection satisfies the requirement from different inducible expression vectors/ particles (i.e. the double antibiotic selection);
4. Depend upon the cell lines and the TetR expression levels, normally a 20-fold to 1000-fold induction can be obtained after addition of tetracycline;

Applications:

The premade TetR lentiviral particle is the best method to delivery the TetR protein. Gentarget provides TetR expression lentiviral particles with different antibiotic markers. TetR expression particles can be used as follows:

7930 Arjons Drive, Suite B
San Diego, CA 92126, USA
Phone: 1 (858) 265-6446
Fax: 1 (800) 380-4198
Email: orders@gentarget.com

1. It can be transduced alone into any host cells of your interest to generate TetR expression stable cell line. The generated stable cell is **then** transduced with any inducible target expression particles, and the double transduced cells will demonstrate a tetracycline dose-dependent inducible expression of the target.
2. It can be **co-transduced** with any inducible target expression lentiviral particles. And the double transduced cells (selected via double antibiotic markers) will demonstrate a tetracycline dose-dependent inducible expression of the target.

Protocols (as general reference):

Method A: transduce TetR lentiviral particles alone to generate TetR-stable cell line:

1. plate cells in 0.5 ml of complete medium into each well in 24-well plate, incubated at 37°C for overnight,
2. At the time of transduction, the cell density should be at around 50% confluent. Thaw TetR lentiviral particle, add 20ul ~ 100ul into one well dependent upon cell types (Note: Note: active divided cells have higher transduction efficiency, therefore, less amount virus is needed). Optionally, add polybrene into medium at final concentration of 6ug/ml (Note: polybrene can enhance transduction efficiency, but it may be toxic to some cell lines, like some primary neuron cells.), incubated cells at 37°C for **72 hours,**
3. Remove the medium and replace with fresh, complete medium containing the appropriate amount of antibiotic (dependent TetR particle types) to select for stably transduced cells;
4. Trypsinize cells and pass into new well in 24-well plate in complete medium with appropriate amount of antibiotic (Note: a kill curve may have to be tested first to determine the minimal concentration of the appropriate antibiotic that is required to kill your untransduced cells), and replace medium containing antibiotic every 2-3 days until resistant colonies can be identified (Note: it takes 2-4 weeks dependent upon antibiotic types).
5. Pick several resistant colonies and expand each clone into flask and assay for Tet repressor expression by Western Blot, ELISA or qRT-PCR (Note: TetR assay materials need to be obtained form other vendors and is not provide with TetR particles. **To verify the TetR protein expression by WB, you can use any anti wild-type TetR antibody, such as Boca Scientific's CAT#: TET02, or Clontech's CAT# 631132**). Alternatively, you may pool the heterogeneous population of resistant cells and assay for Tet repressor expression. If Bsd-RFP dual marker TetR particles (Cat#: **LVP017-Bsd-RFP**) are used, the TetR expression cells can be identified via RFP fluorescent under microscope.
6. Positive transduced cells are ready for transfection with inducible expression vectors or transduction with inducible expression lentiviral particles, for the tetracycline inducible expression.
7. At 48 hours after deliver target expression vector/particles, change medium and add tetracycline to induce expression of the target. (Note: vary the final concentration of tetracycline from 0.01 ug/ml to 1 ug/ml to obtain different expression levels of target).

Method B: co-transduce TetR lentiviral particles and expression particles for tetracycline inducible expression:

1. Plate cells in 0.5 ml of complete medium each well in 24-well plate, incubated at 37°C for overnight,
2. At the time of transduction, the cell density should be at around 50% confluent. Thaw TetR lentiviral particles, add 50ul ~ 100ul of TetR particles into one well, dependent upon cell types (Note: active

7930 Arjons Drive, Suite B
San Diego, CA 92126, USA
Phone: 1 (858) 265-6446
Fax: 1 (800) 380-4198
Email: orders@gentarget.com

divided cells have higher transduction efficiency, therefore, less amount virus is needed). Optionally, add polybrene into medium at final concentration of 6ug/ml (Note: polybrene can enhance transduction efficiency, but it may be toxic to some cell lines, like some primary neuron cells.), incubated cells at 37°C for **24 hours**,

3. Then, add ~50ul of inducible expression particles into the well in 24-well plates (Note: ideally, the TetR particles/ expression particles has the MOI ratio at 5:1, but in general, used TetR particles should more than expression particles), incubated at 37°C for overnight,
4. Add tetracycline to induce expression. The amount of tetracycline to use is dependent upon cell types, a common used final concentration is 1ug/ml. (Note: many bovine sera used in culture are contaminated with tetracycline or its derivatives, which can affect basal expression),
5. Alternatively, at 48~72 hours after both transduction, add antibiotics to select for stably transduced cells (Note: add both antibiotics for TetR particles and expression particles at the same time to select double transdued cells).
6. After obtain the double transduced cells, add tetracycline to induce expression of the gene of interest. (Note: vary the concentration of tetracycline from 0.1 ug/ml to 2 ug/ml to obtain different expression levels of target).

Example / Control for inducible expression:

The following picture demonstrated the GFP expression from premade inducible GFP lentiviral particles (Cat#: **LVP024**) before and after induction.

Left image: Inducible GFP particles (LVP024) transduced on HEK293 cells;
Middle image: Inducible GFP particles transduced in TetR stable cells;
Right inage: Inducible GFP particles transduced in TetR stable cells and induced by 1ug/ml Tet.

Related products:

Products	Name	Applications
Product series (>500 CAT#)	**Premade expression ready lentiviral particle for human and mouse genes**	• Used as constitutive expression of a human or mouse target. • Or used with TetR particles together for inducible expression of a human or mouse target.

7930 Arjons Drive, Suite B
San Diego, CA 92126, USA
Phone: 1 (858) 265-6446
Fax: 1 (800) 380-4198
Email: orders@gentarget.com

Inducible expression control viruses	GFP (CAT#:**LVP024**) YFP (CAT#: **LVP357**) RFP (CAT#: **LVP531**)	Control GFP, RFP or YFP lentiviral particles for validation of inducible expression.
TetR expression stable cell lines	Premade TetR Stable cell lines in 293 host cells with different antibiotic selection markers (CAT#: **SC005**) .	Used for tetracycline inducible expression of any constructs with TetR binding sequence in their promoter.

Safety Precaution:

Gentarget lentiviral particles adapts must advanced lentiviral safety features (using the third generation vectors with self-inactivation SIN-3UTR), and the premade lentivirus is replication incompetent. However, please use extra caution when using lentiviral particles. Use the lentiviral particles in Bio-safety II cabinet. Wear glove all the time when handling Lentiviral particles! Please refer CDC and NIH's guidelines for more details regarding to safety issues.

Attachment: GenTarget's pre-made lentivirus product categories.

Product Category	Product Description (please click into each category's page)
Pathway Reporter	Repoter Lentivirus for all kinds of pathway screening assays
Cell Immortalization	Lentivirus for cell immortalization: Large T-antigen, hTERT, EBNA1/EBNA2, HpV16-E6/E7, Adenovial E1A, Kras_G12V, HOXA9, et al.
ImmunoOncology Research	Lentivirus products for immuno therapy research: CAR and TCR; Assay Cell Lines for T-cell targeted killing assay and other cell-based assays; over-expression lentivirus products for the immune response targets; Cell surface antigens (CDs); immune checkpoint / Receptors; CRISPR gene Repair and knock-IN lentivirus; CRISPR knockout lentivirus;
CAR-T, TCR Lentivirus	**CARs** Lentivirus: Anti-CD19 /CD20 /CD22 /BCMA /hHER2 /HLA-A2 /TGFβ; **TCRs**: MART-1/ NY-ESO1/ CD1d-α-GalCer/ TRαV3-F2A-TRβV5-6;
CRISPR Gene Editing	Preamde lentivirus express humanzied wild-type **Cas9** endonuclease, the **dCas9**, gRNAs, **CRISPR** gene editing research
Epigenomic: CRISPRi and CRISPRa	"**dCas9-Protein**" fusion Lentivirus for epigenomic modification, resulted in CRISPR interference (CRISPRi) or activation (CRISPRa).

GenTarget Inc

7930 Arjons Drive, Suite B
San Diego, CA 92126, USA
Phone: 1 (858) 265-6446
Fax: 1 (800) 380-4198
Email: orders@gentarget.com

Product Category	Product Description (please click into each category's page)
Cell-Specific Reporter	a set of reporter lentiviruses to express a luminescence or fluorescent reporter (firefly Luciferase, Renilla luciferase, RFP or GFP fluorescent marker) under a tissue specific promoter
Infectious Antigens	Llentivirus that express all kinds of infectious antigens with C-term 6His-tag.
Virus Like Particles (VLP)	Lentiviral Like Particles, pseudo-typed with a different envelope proteins.
Non-integrating LV	Integration Defective Lentivirus, express different targets for transient expression without the unwanted insertional mutagenesis.
shRNA Knockdown	Knockdown verifeid and customized shRNA lentivirus for target knockdown,
microRNA lentivirus	Premade lentivirus expression human or mouse **precursor miRNA**. And **anti-miRNA** lentivector and virus for human and mouse miRNA.
Anti-miNA lentivirus	Pre-made lentivirus expression a specific anti-miRNA cassette.
Human and mouse ORFs	Premade lentivirus expressin a **human, mouse or rat** gene with RFP-Blastididin fusion dual markers.
Luciferase expression	Premade lentivirus for all kinds of luciferase protein expression**: firefly and Renilla, Red-Luc and more,** with different antibiotic selection markers.
Fluorescent Markers	Lentivirus express all commonly used fluorescent proteins: GFP, RFP, CFP, BFP YFP, niRFP, unstable GFP and others.
Luminescent Imaging	Lentivirus express Nano-Latern as Bio-probes for in vivo imaging of sub-cellular structural organization and dynamic processes in living cells and organisms
Sub-cellular Imaging	Lentivirus contain a well-defined organelle targeting signal fusioned to a fluorescent protein, great tools for live-cell imaging and for dynamic investigation of sub-cellular signal pathways.
Cytoskeleton Imaging	A fluorescent marker (GFP, RFP or CFP) fusion with a cellular structure protein, provides a convenient tool for visualization of cytoskeletal structure

GenTarget Inc

7930 Arjons Drive, Suite B
San Diego, CA 92126, USA
Phone: 1 (858) 265-6446
Fax: 1 (800) 380-4198
Email: orders@gentarget.com

Product Category	Product Description (please click into each category's page)
Unstable GFP	Lentivirus express the the destabilized GFP (uGFP) which provides fast turnover responses in signal pathway assay and in knockdown / knockout detection
near-infrared RFP	The near-infrared Red fluorescent (niRFP) expression Lentiviurs provides the whole-body images with better contrast and brighter images
Fluorescent-ORF fusion	Pre-made lentivirus expression a "**GFP/RFP/CFP-ORF**" fusion target.
CRE recombinase	Premade lentivirus for expressing **nuclear permeant CRE** recombinase with different flurescent and antibiotic markers.
CRE, Flp ColorSwtich	Lentivirus expressing "LoxP-GFP-Stop-LoxP-RFP" or "FRT-GFP-Stop-FRT-RFP" cassette, used to monitor the CRE or Flp recombination event in vivo.
SEAP Reporter	lentivirus expressing SEAP under different promoters (TetCMV, EF1a, CAG, Ubc, mPGK, Actin-beta or a signal pathway responsive promoter),
TetR Repressor	Premade lentivirus expressin TetR (tetracycline regulator) protein, the repressor protein for the inducible expression system.
rtTA Expression	rtTA binds to the tetracycline operator element (TetO) in the presence of doxycycline (Dox). Used for Tet-On /OFF inducible system.
iPS factors	Premde lentivirus for human and mouse iPS **(Myc, NANOG, OCT4, SOX2, FLF4**) factors with different fluorescent and antibitoic markers
LacZ expression	Express different full length **β- galactosidase (lacZ)** with different selection markers
Negative control lentiviruses	Premade **negative control lentivirus with different markers**: serves as the negative control of lentivurs treatment, for validation of the specificity of any lentivirus target expression effects.
Other Enzyme expression	Ready-to-use lentivirus, expressing a specific enzymes with different selection markers.
Ultra titer lentivirus	Ultra-titer lentivirus used for the hard-to-transduced cells and for in vivo manipulation of sperm cells, or stem cells.

7930 Arjons Drive, Suite B
San Diego, CA 92126, USA
Phone: 1 (858) 265-6446
Fax: 1 (800) 380-4198
Email: orders@gentarget.com

References:

1. Annu Rev Microbiol. 1994;48:345-69.
2. Microbiol Mol Biol Rev. 2005 Jun;69(2):326-56.
3. NIH Guidelines for Biosafety Considerations for Research with Lentiviral Vectors. (Link).
4. CDC guidelines for Lab Biosafety levels (Link).